galim
tap and more

Product Drawing

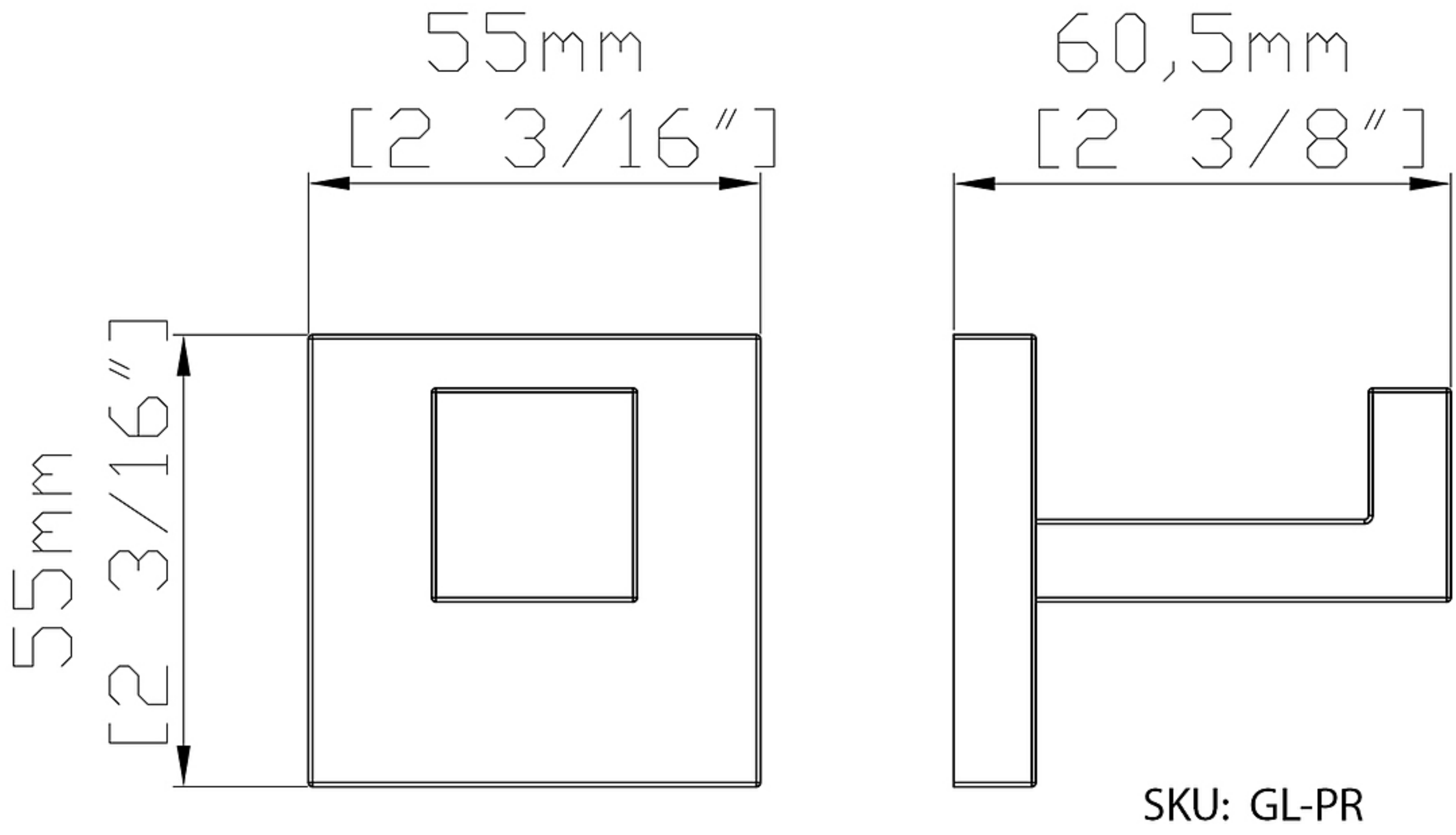

Note: Dimensions are for reference only. Detailed information is in accordance with the final product.

T.855-608-4150 **SALES@GALIMBATH.COM** **WWW.GALIMBATH.COM**

All technical and pricing information is subject to change without prior notice. To confirm accuracy, please contact us above.